CALIAN®
Confidence. Engineered.

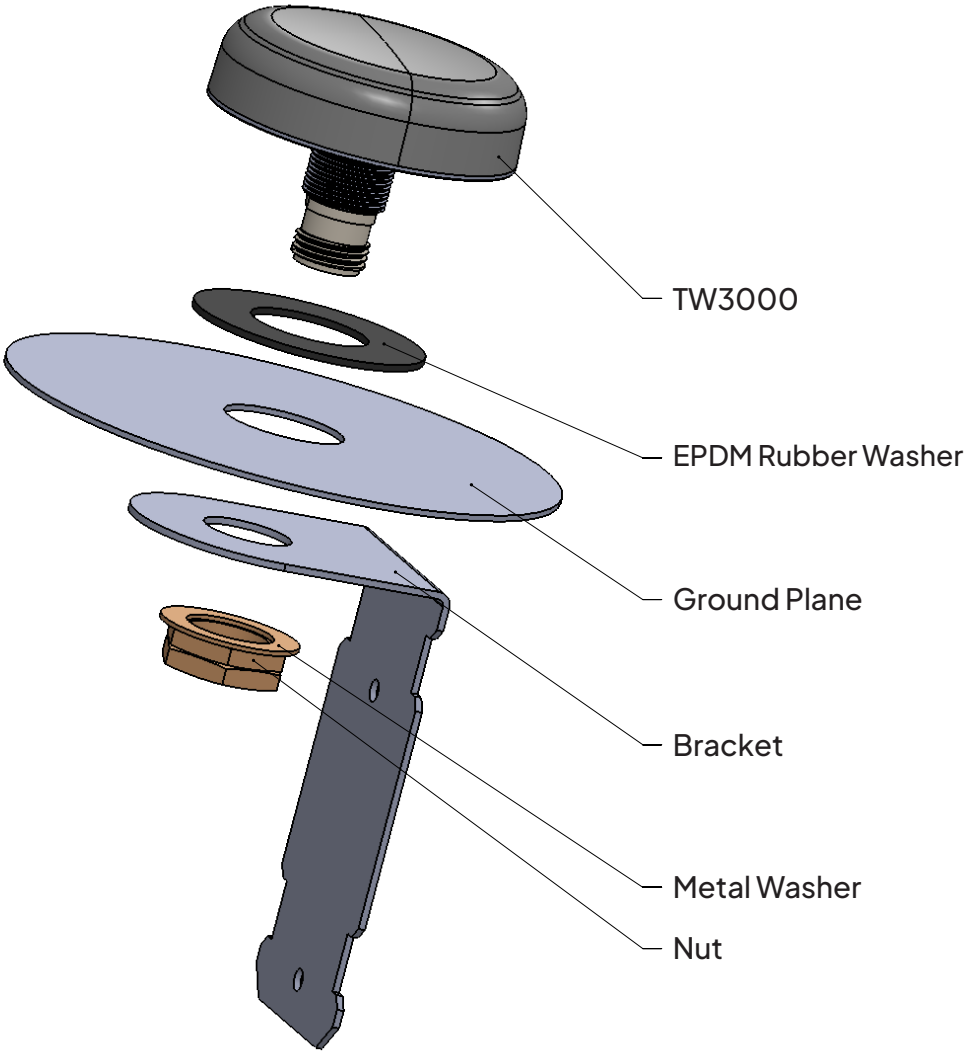

Notes:

Recommended Torque Specifications:

a. Connector:
TNC – 0.6 N·m (5 in·lb),
N-type – 0.9 N·m (8 in·lb)

b. Base Mount:
M18X1 Nuts - 14 N·m (125 in·lb)

Instructions to prevent self-loosening of the M18X1 nuts:

Step 1: Tighten first M18X1 nut to 6 N·m (53 in·lb).

Step 2: Install second M18X1 nut then use a spanner to hold the first nut stationary.

Step 3: Tighten second M18X1 nut to 14 N·m (125 in·lb).

Alternatively: Use one M18X1 nut and a lock washer.